Byworth
BOILERS

Steam

MADE IN BRITAIN

CELEBRATING 50 YEARS IN BUSINESS 1968 - 2018

"I am writing as a businessman for businessmen"

Dennis Baldwin, 1990,
in his book "Soil sterilisation using steam".

Dennis Baldwin, Founder of Byworth Boilers. Dennis used steam to heat his commercial greenhouses where he grew Chrysanthemums.

Our Story

Dennis Baldwin – the customer turned entrepreneur - the essence of our brand and our heritage.

Byworth was founded in 1968 by Dennis Baldwin. Dennis became a well-established chrysanthemum and tomato grower. The entrepreneur ran his own successful business from the young age of 17.

Based on 3 sites around Yorkshire, Dennis used steam boilers to heat his 3 acres of glasshouses.

He came from a long line of engineers and with that inherent talent, he decided to design and install his own heating and boiler systems. Soon after, other horticultural businesses were recognising his flair for producing high-quality steam boilers and the demand for his products rose.
With two sons more interested in engineering than growing, Dennis took the brave decision (aged 42) to make a career change. He sold his successful horticultural company to finance a land investment to set up a factory. This was when Dennis Baldwin & Sons boiler manufacturers were first established; later to be known as Byworth Boilers. They supplied steam boilers, not only to growers but to other industries as well.

Dennis was able to build a product that better suited the needs of his industry. These values remain today as Byworth seek to produce solutions that fit the customer's requirements, never offering a 'one size' fits all. We understand the challenges organisations often face, and our team of experts will work in partnership with you to deliver solutions that better support your individual needs.

Our Customers

Today we serve a diverse range of customers, big and small, in a multitude of industries including:

- Food
- Beverage
- Healthcare
- Paper and Packaging
- Pharmaceutical
- Architecture/M&E/Civil Engineering
- Petrochemical
- Animal Feeds & Farming
- Laundries
- Textiles

Your Guide

Conventional Steam Boilers

The M-Series Range
These compact boilers are perfect for smaller applications and those who are new to steam. The range includes our space-saving, skid-mounted, all-in-one solution with everything you'll need for a quick and easy installation.
Pages 5 - 8

The Peaksman Range
The Peaksman vertical steam boiler delivers Ultra Low NOx emissions in 125 kg/hr to 1000 kg/hr F&A 100°C steam outputs. In spaces where our market leading M-Series horizontal steam boiler would be impractical, the compact Peaksman vertical steam boiler is a perfect fit, offering modulating controls as standard alongside automatic TDS and bottom blowdown systems.
Pages 9 - 12

The Yorkshireman Range
With a high degree of reliability, low emissions and high efficiency, the Yorkshireman, three-pass, wet-back boilers boilers are the workhorse of industry.

The Yorkshireman2, with its patented X-ID tube technology is the preferred choice for the truly energy-conscious.
Pages 13 - 18

Heat Recovery Range

Our waste heat boilers offer enhanced efficiency by producing steam using heat recovered from other processes that would otherwise be wasted.
Pages 19 - 20

Economisers
New and old boilers alike will benefit from reduced fuel consumption by installing one of these two technologies. Heat is recovered from the boilers own waste gases to heat either the boiler feedwater or combustion air.
Pages 21 - 22

Other Products

You may also need:

Boiler Houses
We offer a range of boiler-housing options from prefabricated, "plug & play" boiler houses, through to full on-site construction of larger buildings.
Pages 23 - 30

Unity Boiler House Control System
Byworth's advanced control system offers users smart control for their entire boilerhouse. This unique control system has been recognised with a Queen's Award for Enterprise in Innovation, 2016.
Pages 31 - 34

Accumulators
Remove the peaks and troughs from your steam demand with a custom-made steam storage vessel.
Pages 35- 36

Hotwells, Deaerators & Blowdown Vessels
Hotwell tanks and deaerators are essential to capture returning condensate, and provide a strategic store of hot, treated water for the boiler. Blowdown vessels provide a safe means of cooling waste water from the boiler before discharging it to drain.
Pages 37 - 40

Burners - Did you know...
...We work with all the leading manufacturers to ensure we offer you the right burner to meet your unique needs.

M-SERIES

Compact horizontal boiler for light to medium steam load.

Sizes: from 250 – 5,000 kg/hr
Working pressure: up to 13.8 bar g

Made exclusively in the UK, the Byworth M-Series is the popular option for small to medium applications. Robust, reliable and designed for long-term ease of maintenance; the M-Series range is the smart choice for those who need a little more steam storage or drier steam than typically offered by vertical solutions.

The M-Series is all about getting the basics right so you can focus on delivering your customers' needs.

- The ideal balance between efficiency and size
- Suitable for a wide range of liquid or gaseous fuels including natural gas, LPG, LNG, biogas and heating oils
- Less than 100mg/m^3 NO_X when firing on natural gas *
- Less than 200mg/m^3 NO_X when burning class A2/D fuel oil to BS 2869 *
- Lightweight, hinged front-door
- Removable rear doors
- Spiral wound turbulators significantly improve efficiency without increasing the boiler footprint
- Available as a compact, skid-mounted option for the those with limited space
- A wide range of upgrades are available including efficiency enhancements and controls for unattended operation

*Applies to boiler range 1500kg and above

Reduced Downtime

The M-Series has design advantages such as a lightweight, hinged front door, weld inspection panels and removable doors; creating an ease of maintenance for any engineer or inspector. This reduces downtime significantly during cleaning, maintenance and inspection

Skid mounted version of the M-Series boiler - see page 21

The M-Series Dimensions

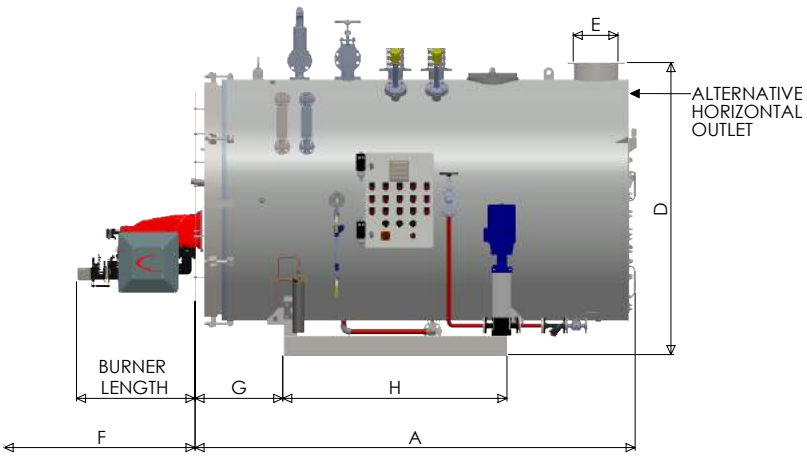

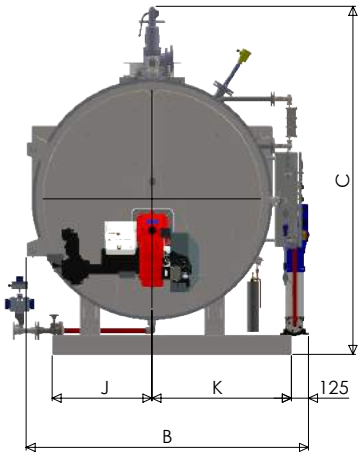

M-SERIES - BOILER DIMENSIONS

Model MX		250		500		1000			1360		1500LN	2000LN		2500LN		3000LN		3500LN		4000LN		5000LN	
Duty F & A 100°C	lb/hr	500	550	1000	1100	1500	2000	2200	2500	3000	3300	4000	4400	5000	5500	6000	6600	7000	7700	8000	8800	10000	11000
	hp	14	16	29	32	43	58	64	72	87	96	116	128	145	160	174	192	203	224	232	256	289	320
	kg/hr	227	250	454	500	681	908	1000	1135	1362	1500	1816	2000	2270	2500	2724	3000	3178	3500	3632	4000	4543	5000
	kW	146	160	292	322	438	584	644	730	876	966	1168	1287	1460	1610	1752	1931	2048	2254	2336	2576	2920	3220
Boiler Length	A	1435		1985		2105			2630		2630	3110		3275		3580		4105		4330		4440	
Overall Width	B	1250		1295		1625			1652		1885	2030		2130		2180		2310		2360		2720	
Height to top of safety Valve	C	1485		1750		2125			2240		2350	2535		2735		2850		2925		3005		3280	
Minimum height /chimney height	D	1340		1510		1870			1930		1990	2140		2340		2390		2515		2455		2870	
Chimney Diameter ID	E	125		200		225			250		300	350		350		400		450		450		500	
Tube Withdrawal Space	F	800		1220		1320			1800		2025	2425		2550		2835		2900		2900		3010	
Base Frame Inset	G	280		450		450			500		500	580		650		650		825		825		825	
Base Frame Length	H	1210		1400		1450			1800		1800	1620		1720		1930		2420		2420		2530	
Base Frame Width	J	450		510		630			650		700	730		780		750		905		1010		1045	
Base Frame Width	K	570		610		820			850		950	1020		1070		1100		1105		1140		1325	
Steam Outlet	100psig	25NB		40NB		50NB			65NB		65NB	80NB		80NB		100NB		100NB		100NB		100NB	
Steam Outlet	150psig	25NB		40NB		50NB			65NB		65NB	80NB		80NB		100NB		100NB		100NB		100NB	
Safety Valve Outlet	100psig	11/4" BSP		11/4" BSP		11/4" BSP			11/2" BSP		11/2" BSP	2" BSP		2" BSP		21/2" BSP		21/2" BSP		21/2" BSP		3" BSP	
Safety Valve Outlet	150psig	11/4" BSP		11/4" BSP		11/4" BSP			11/2" BSP		11/2" BSP	2" BSP		2" BSP		21/2" BSP		21/2" BSP		21/2" BSP		3" BSP	
Water Inlet		1" BSP		1" BSP		1" BSP			1" BSP		1" BSP	1" BSP		1" BSP		11/4" BSP		11/4" BSP		11/4" BSP		11/4" BSP	
Blowdown Outlet		1" BSP		1" BSP		11/4" BSP			11/4" BSP		11/4" BSP	11/4" BSP		11/4" BSP		11/4" BSP		11/4" BSP		11/4" BSP		11/4" BSP	
Burner Length*	mm	536		732		790			790		790	965		965		965		965		1155		1155	
Weight Empty	Kg	1100		1465		3105			3900		5100	6420		7220		7860		7990		8470		9430	
Weight Full to NWL	Kg	1300		2030		3860			5265		6950	9660		10340		11575		11184		11990		13690	
Total Heating Surface	m^2	3.92		8.34		16.9			24.4		26.1	34.4		45.3									
Steam Release Area	m^2	0.57		0.98		1.59			2.03		1.99	2.8		3									
Steam Space Volume	m^3	0.05		0.1		0.28			0.35		0.26	0.47		0.52									

** Variable depending upon burner manufacturer*
For illustration purposes only design drawings available upon request

MADE IN BRITAIN

PEAKSMAN

A quality Byworth product, made in Britain

Sizes: 125 - 1000 kg/hr
Working pressure: 10.34 bar g (maximum)

With one of the smallest footprints in the industry the Byworth Peaksman boiler is the ideal steam solution for small to medium applications. Robust, reliable and designed for long-term ease of maintenance.

- Designed and manufactured in Britain
- Ultra low NOx (less than 40mg/m^3 NOx when firing on Natural Gas)
- Modulating Controls
- 5-year guarantee (against manufacture defects for the vessel)
- Suitable to fire on Natural Gas or LPG
- Horizontally mounted burner for ease of maintenance and to reduce overall height

The Peaksman is all about providing the very best quality, British made steam solution within a small footprint.

RIELLO
RX 850 S/PV
DUNGS

The Peaksman Dimensions

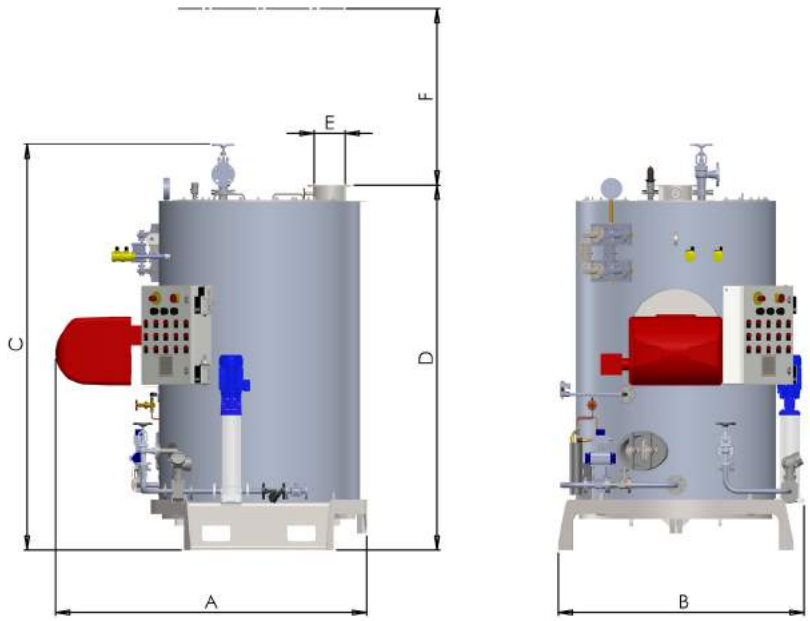

PEAKSMAN VERTICAL SERIES - BOILER DIMENSIONS

Model PSX		125	250	500	750	1000
Duty F & A 100°C	lb/hr	275	550	1100	1650	2200
	hp	8	16	32	48	64
	kg/hr	125	250	500	750	1000
	kW	78	157	313	470	627
Boiler Depth	A	1495		1775	2190	
Overall Width	B	1200		1450	1740	
Height to top of Crown Valve	C	2220		2600	2865	
Minimum height /chimney height	D	1980		2350	2575	
Chimney Diameter ID	E	125		150	225	
Tube Withdrawal Space	F	1150		1520	1750	
Transport Length*	G	2220*		2600*	2865*	
Transport Width*	H	1090*		1350*	1650*	
Transport Height*	J	980*		1250*	1550*	
Steam Outlet	DN	DN25		DN40	DN50	
Safety Valve Outlet	DN	DN25		DN25	DN25	
Water Inlet	DN	DN25		DN25	DN25	
Blowdown Outlet	DN	DN25		DN25	DN32	
Transport Weight (stripped down)	Kg	1000		1600	2700	
Weight Empty	Kg	1200		1800	3000	
Weight Full to NWL	Kg	1560		2600	4370	

** Transport measurements are based on boiler being laid on its back.*
For illustration purposes only. Design drawing available upon request

MADE IN BRITAIN

Eliminating the cracks

We only weld the heat transfer tubes at the hottest end to allow the tubes to expand and contract with the boiler, eliminating tube-end cracks that are typical of boilers with tubes fixed at both ends.

YORKSHIREMAN

Three pass wetback - Suited to medium to heavy steam load.

Sizes: from 1,000 to 18,000 kg/hr
Working pressure: up to 23 bar gauge

- Low NO_x
- High quality dry steam across a wide range of operating conditions thanks to the generous shell & furnace dimensions
- Thermal stresses are alleviated due to a central furnace and flat flanged end plates
- Heat losses are minimised with high-density external insulation
- By using high-performance, ceramic materials we have eliminated problems associated with traditional refractory cement
- Faster NDT inspections as a result of multiple inspection ports, removable cladding panels, front & rear doors, as well as zero refractory on gas and light oil fired boilers
- Quality assured. Our internal inspection regime exceeds BS and EN requirements; this includes 100% ultrasonic inspections of all major welds
- Manufactured in Britain. All our boilers are individually built to customer Requirements
- Our standard range includes all fittings necessary for a working boiler including a sample cooler and NDT inspection panels. Larger boilers include access ladders and gantries

YORKSHIREMAN2

As part of a 2 year research and development programme, in conjunction with Leeds University, Byworth developed the Yorkshireman2 boiler. Aware that running costs are of paramount importance to steam users, the brief was, by rigorous testing, to ascertain and prove the optimum configuration of shell, furnace, and tubes for maximum boiler efficiency and low emissions.

This boiler range incorporates many energy saving features including the unique X-ID boiler tube, making the multi-award winning Yorkshireman2 the most energy efficient steam boiler available in the UK today with an efficiency of approximately 95%*
**Based on nett calorific values in accordance to EN12953*

The unique X-ID tubes are an exciting feature defining the outstanding efficiency of the Yorkshireman2. With special helical internal ribs, this tube gives a significant 80% increased heat transfer over normal tube.

Check out the Unity Boiler house control system for improved fuel saving.
Page 31

The Yorkshireman Dimensions

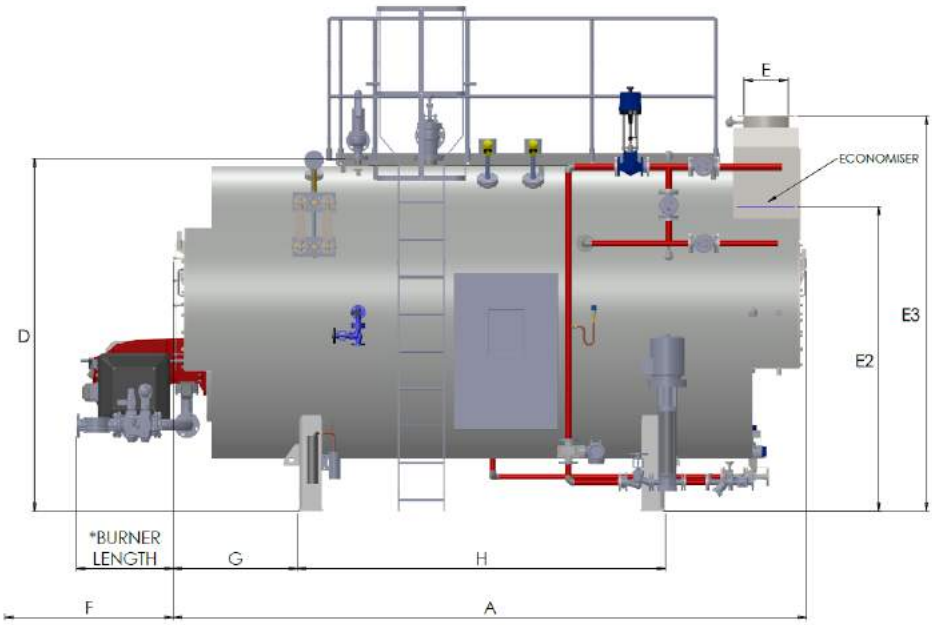

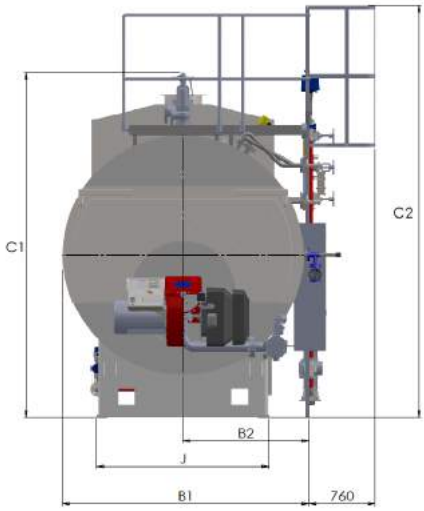

Model YSXLN / Y2SXLN		1000	1500	2000	2500	3000	3500	4000	4500	5000	6000	7000	8000	9000	10000	11250	12500	13750	16000	18000
Duty F & A 100°C	lb/hr	2200	3300	4400	5500	6600	7700	8800	9900	11000	13200	15400	17600	19800	22000	24800	27600	30300	35100	39700
	kg/hr	1000	1500	2000	2500	3000	3500	4000	4500	5000	6000	7000	8000	9000	10000	11250	12500	13750	15900	18000
	kW	627	940	1254	1567	1881	2194	2508	2821	3135	3762	4389	5016	5642	6269	7053	7837	8620	9968	11285
Overall Length	**A**	3367	3777	4072	4603	4782	4967	5236	5254	5566	5883	6194	6473	6477	6903	6991	7339	7614	7891	8041
Overall Width	**B1**	1820	2120	2235	2420	2450	2555	2610	2675	2690	2820	2906	3128	3245	3315	3340	3510	3560	3800	3900
Width Dimension	**B2**	1010	1217	1267	1377	1367	1432	1445	1480	1465	1529	1558	1690	1725	1758	1730	1815	1815	1978	2000
Overall Height	**C1**	2490	2653	2901	3051	3191	3271	3355	3415	3540	3672	3786	4046	4145	4217	4455	4625	4700	4879	5035
Overall Height with Ladder	**C2**	n/a	n/a	n/a	n/a	3720	3796	3980	3940	4000	4132	4246	4426	4590	4664	4774	4940	5020	5194	5350
Minimum Height	**D**	2150	2263	2466	2616	2696	2776	2860	2920	2980	3112	3226	3406	3505	3577	3685	3855	3930	4109	4265
Chimney I/D Standard	**E1**	225	250	300	350	350	400	400	450	450	500	550	550	600	650	650	700	750	800	850
Chimney I/D with Economiser	**E1**	200	225	250	300	300	350	350	400	400	450	450	500	550	550	600	650	650	700	750
Chimney Height	**E2**	1865	1988	2108	2203	2248	2348	2390	2435	2485	2606	2683	2783	2860	2762	2850	2915	2985	3152	3275
Chimney Height with Economiser	**E3**	2450	2618	2688	2803	2853	2918	3100	3150	3185	3306	3493	3723	3700	3772	3910	3940	4005	4087	4340
Tube Withdrawal	**F**	2730	3030	3230	3730	3860	3960	4230	4230	4480	4732	4980	5230	5214	5510	5560	5830	6010	6330	6330
Base inset	**G**	570	610	695	840	880	950	975	996	1056	1000	1070	1100	1170	1196	1200	1240	1270	1180	1230
Max. distance over base	**H**	2140	2388	2540	2620	2840	2830	3000	3070	3210	3700	3800	3890	3920	4015	4276	4470	4720	5030	5030
Max. width base	**J**	1120	1120	1280	1470	1470	1620	1720	1720	1770	1870	2070	2070	2320	2320	2320	2420	2420	2590	2590
Feed Pump - 150psi	**DN**	25	25	25	25	25	32	32	32	32	40	40	40	40	40	40	50	50	50	50
Crown Valve Outlet - 150psi	**DN**	50	65	80	80	100	100	100	100	125	125	125	150	150	150	200	200	200	200	200
Safety Valve Outlet - 150psi	**DN**	40	40	50	50	50	65	65	65	65	80	80	80	100	100	100	100	100	125	125
Blowdown Valve	**DN**	32	32	32	32	32	32	50	50	50	50	50	50	50	50	50	50	50	50	50
Weight Empty	**kg**	4525	5750	7040	8879	10161	11260	13150	13870	15370	17890	20500	22770	25289	29500	31440	32167	33546	37493	39545
Weight to NWL	**kg**	6965	9230	11430	14737	16926	18700	21710	22775	25260	29160	33520	38560	43195	49280	52420	56372	59350	67946	73470
Flooded Weight	**kg**	7316	9700	12021	15629	17903	19840	22960	24164	26819	31131	36000	41168	46803	52265	57188	62406	65869	76083	82993
Total Heating Surface	**m2**	21.4	31.3	42.6	57.3	72.5	79.2	91.4	99.6	114.4	147	177	213	213	242	281	313	312	368.7	405.8
Steam Release Area	**m2**	3	3.1	3.9	5	5.2	5.8	3.2	6.3	6.88	7.6	8.8	9.7	11	11.1	12	14.1	15.1	17.2	18.4
Steam Space Volume	**m3**	0.35	0.47	0.59	0.89	0.98	1.14	1.25	1.39	1.56	1.97	2.48	2.60	3.60	2.99	4.77	6.03	6.52	8.14	9.52

Note - for YSX8000 and above support saddles supplied only

** Variable depending upon burner manufacturer*

For illustration purposes only design drawings available upon request

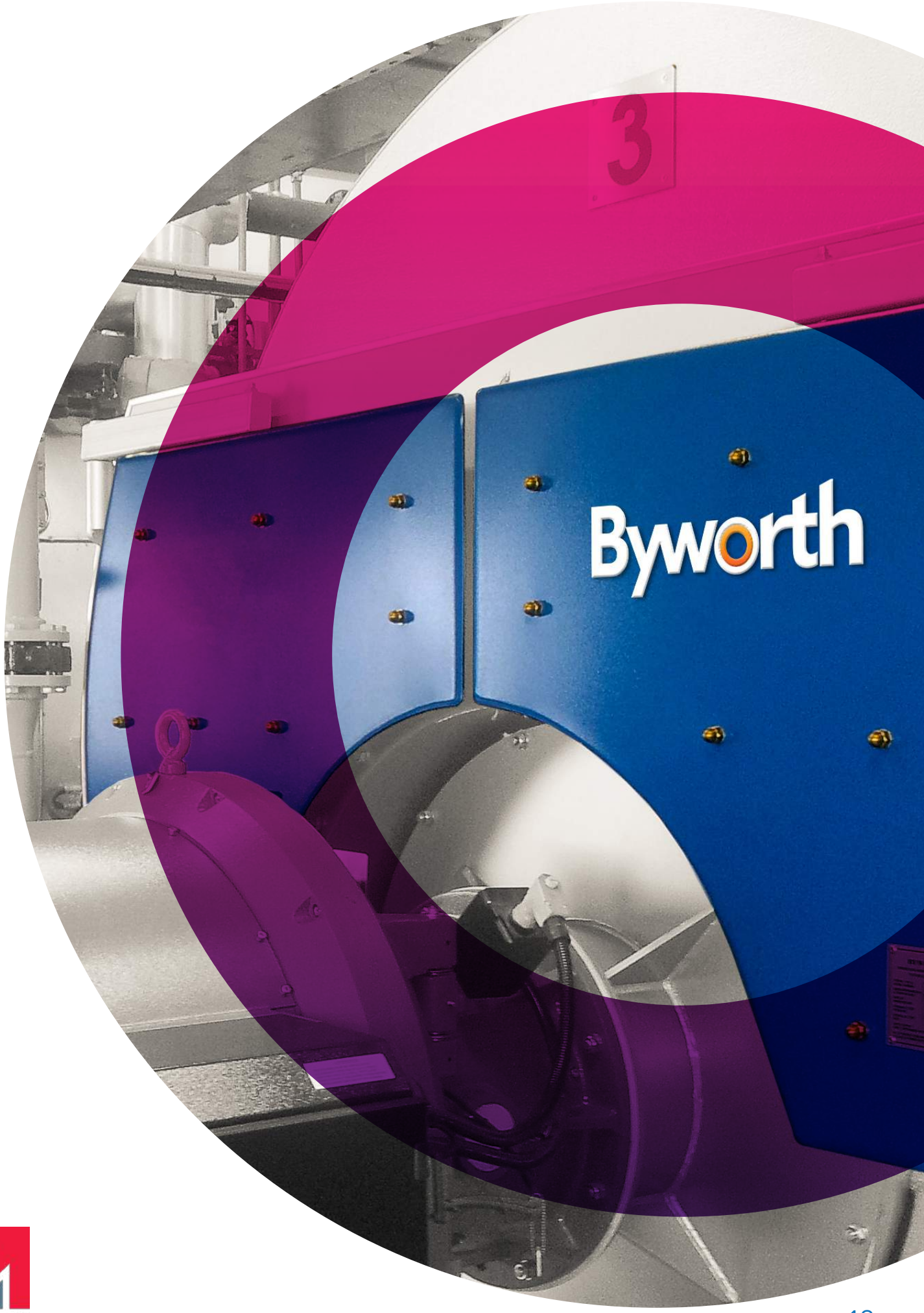

MADE IN BRITAIN

Heat Recovery Range

At Byworth we leverage our extensive expertise in efficient industrial heating solutions. Our heat recovery range is designed to achieve optimum performance given the heat available and the boiler output required.

Waste heat boilers can recover heat which is produced as a by-product of another process, turning heat that would otherwise be lost into useful steam or hot water.

As well as a range of single pass waste heat boilers to suit the most commonly available gas engines, Byworth are able to design bespoke waste heat boilers to suit other applications. All boilers are designed to achieve optimum performance given the heat available and the boiler output required.

Our waste heat recovery units are an ideal solution for fluid heating from gas turbine exhaust, internal combustion engine exhaust and process heat sources.

Byworth can also supply two pass, three pass, or composite boilers to meet specific customer and process requirements.

Composite boilers have a conventional fired section as the primary energy source, supplemented by waste heat when available. Alternatively, waste heat may be the primary source topped up by the burner when required.

Composite vs Single Pass Waste Heat

Composite boilers are sized to avoid problems often associated with more conventional CHP systems where the small, waste heat boiler is unable to cope with big swings in demand, therefore, requiring backup from often aged, conventionally fired boilers. The result is composites have less engine trips and improved steam quality.

Economisers

Available as an integral, cartridge-type unit which is pre-piped and mounted to a new boiler or as a stand-alone unit. Economisers and air preheaters are an easy way to maximise the efficiency of your combustion plant by recovering waste heat from the flue gases into the boiler feed water or combustion air.

Economisers

A typical economiser will reduce the flue gas temperature by between 70 and 100°C, raising the feed water temperature by 20 - 35°C in the process and saving between 4 and 6% on the cost of fuel.

Economisers are constructed from extended surface steel tubes in a steel casing with water flowing through the tubes while the hot gases pass over the outside. Cartridge-type economisers can be supplied with the MX and Yorkshireman boiler ranges at time of manufacture while external units are suitable for on-site installation and retrofit to existing boilers.

Solutions To Fit Your Environment

Packaged Boiler Housing and Energy Centres:

Options range from cost-effective skid mounted boilers and ancillaries, through purpose built pre-fabricated boiler houses, to site-erected portal frame apex roofed building.

Totally mobile

Larger boilers can be trailer mounted for use where steam or hot water is required remotely.

Byworth

Skid-mounted Boiler

These packages save you time and money by having all interconnecting piping and wiring completed in our factory before despatch.

Built with the customer in mind, these ultra-compact, pre-assembled units are supplied with all the essential boiler accessories needed to make a complete system.

Skid mounted boiler contents:

- M-Series Boiler
- Hotwell tank with steam injection system
- Blowdown vessel with vent head
- Feed pump and isolation valve
- Single fuel high/low burner

Optional extras:

- Water softener
- Chemical dosing to suit site requirements

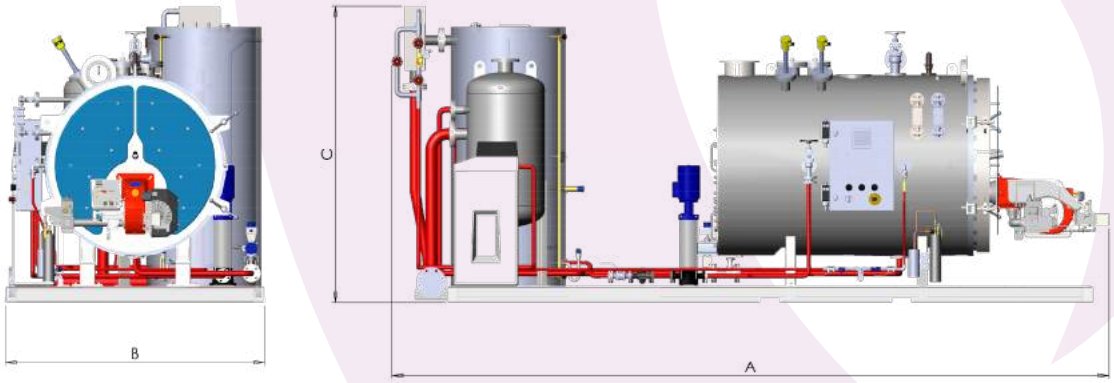

M-SERIES - Skid Package Dimensions

Model M-Series -Skid		250		500		1000			1360	
Duty F & A 100°C	lb/hr	500	550	1000	1100	1500	2000	2200	2500	3000
	hp	14	16	29	32	43	58	64	72	87
	kg/hr	227	250	454	500	681	908	1000	1135	1362
	kW	146	160	292	322	438	584	644	730	876
Skid Overall Length	A	3270		3765		5250			5250	
Skid Overall Width	B	1600		1600		2050			2050	
Approx. Overall Height	C	1550		2250		2300			2300	
Chimney Outet Height		1340		1510		1870			1930	
Chimney Diameter ID		125		200		225			250	
Steam Outlet		25NB		40NB		50NB			65NB	
Safety Valve Outlet		11/4" BSP		11/4" BSP		11/4" BSP			11/2" BSP	
*Weight Empty (Shipping)	kg	1650		2250		4825			5650	
*Weight Full to NWL	kg	2500		3400		6400			8000	

**Approx. weight*

For illustration purposes only design drawings available upon request

The prefabricated boiler house is easily transportable with minimal onsite disruption during installation.

Pre-fabricated Boiler House

If you are looking for a modern self-contained energy centre, benefits include:

Innovation
A simple 'plug-and-play' solution significantly reduces on-site disruption

Sustainable approach
Reduce impact on the local environment – fewer resources on site, fewer site deliveries, less noise, less waste

Programme certainty
Constructed, pre-wired and tested to individual customer requirements prior to despatch, thus generating time-savings on-site

Flexibility
The asset can be moved and installed in other locations either on the same site or other sites providing future operational flexibility

Design for Life
40 year guarantee against corrosion and UV degradation in any normal outside environment (boiler house cladding only), with a time to first maintenance being circa 25-30 years for inland areas, ensures the longevity of the asset.

Boiler house contents:

Steam boiler

Blowdown tank

Duplex water softener

Chemical dosing

Feed tank

Fire detection

Internal lighting

Pre-piped and wired

Water Treatment

Portal Frame Boiler House

Ideal for larger boilers and multi-boiler installations, this complete package is pre-assembled off-site, delivered in sections, and finished on your site with the minimum of fuss.

With complete control over both the contents and the layout, the portal frame option offers customers the greatest flexibility of our packaged options.

Portal frame contents:

- Single or multiple boiler(s)
- Blowdown tank
- Water treatment systems
- Feed tank/ deaerator
- Steam distribution header
- Fire detection
- Pre-piped and wired

A range of optional components:

- Pressure reducing station
- Blowdown heat recovery
- Steam to water heat exchangers
- Waste heat boiler or CHP
- Metering
- Boiler sequence controls

Unity

Smart technology reduces your energy.

Energy costs only go in one direction. Similarly, the cost of fossil fuels is volatile, therefore the price is unlikely to last. If a plant has a lifecycle measuring over decades, it becomes desirable to optimise the way industrial processes use energy. Applying this approach guarantees the plant remains economically viable for the long-term.

Advanced Boiler Control
Unity is an advanced boiler control system offering unprecedented management, efficiency, visibility and fingertip control, recording and cross-referencing data trends from every discrete system area to implement efficiency and cost-saving responses.

The System
Capable of handling dozens of simultaneous I/O's, Unity is suitable for any boiler house; from control of a single boiler to complex multi-boiler, hybrid-fuel installations incorporating waste heat and composite boilers.

Intelligent decisions based on the systems measured values are made to ensure efficient plant operation and reduce operational stress to decrease downtime and increase plant life.

Harnessing the Power of Big Data
The revolutionary boiler control system harnesses the power of digital technology to transform the industrial boiler industry. Unity offers the leading solution for any industry using process steam.

The system employs the Internet of Things (IoT) to remotely monitor and diagnose faults to systematically change boiler-related operations and services.

Its value is in its capability to significantly reduce cost, improve product & service performance and provide better value to our customers. Utilising a cloud platform we are able to collect and combine data from each customer, we are able to uncover data insights; analysing, managing and integrating much broader operational data than ever before.

Encompassing a range of smart data, predictive tools and engineering proficiency to obtain additional insight, the results will help customers reduce fuel usage, increase operational efficiency and significantly reduce any potential downtime. Delivering a step-change in boiler servicing, Unity helps improve response time as well as enhancing onsite efficiency

THE QUEEN'S AWARDS FOR ENTERPRISE INNOVATION 2016

Unity, the first product of its kind on the market, has achieved outstanding results and has been rewarded a 2016 Queen's Award for Enterprise in Innovation

Unity

Unity

The User Experience and Interface

Accessible via a built-in touch sceen and remote desktop.

Quick access to trend data and alarm logs. A simple green, amber, red warning system instantly draws operator attention to changes in plant conditions

User controllable functions that can be programmed and monitored through the HMI include:
- time sequencing and scheduling
- fuel switching or set point adjustments
- selectable setback pressures
- night setback
- automated two stage cold start
- trending of measured values
- logging of alarms
- automated water tests
- automated feed pump rotation
- automated bottom blowdown
- operator user groups
- hotwell level and temperature control
- hints to possible fault causes
- fuel metering (instantaneous and totalised)
- boiler sequencing on actual steam output
- three-part water level control
- chemical dosing pump control
- feed forward burner control

Step-by-step guides to implement best practice boiler checks and maintenance regimes

Big Data = Reduced Downtime & Opex

Unity manages precise data from your boiler house to predict and prevent boiler failure, significantly reducing downtime. The pioneering system employs Industry 4.0 technology to deliver reduced operating costs and safer management of industrial boiler houses.

Unity controls and manages a boiler house as one entity rather than relying on various third party control systems; creating a considerably more efficient and configurable plant.

Data is accessible from the cloud; enabling plant managers to optimise the relationship between boiler and process by understanding when large peaks and troughs are happening.

The intelligent use of data allows site managers and operators to react more quickly to plant conditions, reducing the number of start-stop cycles, fuel and water usage.

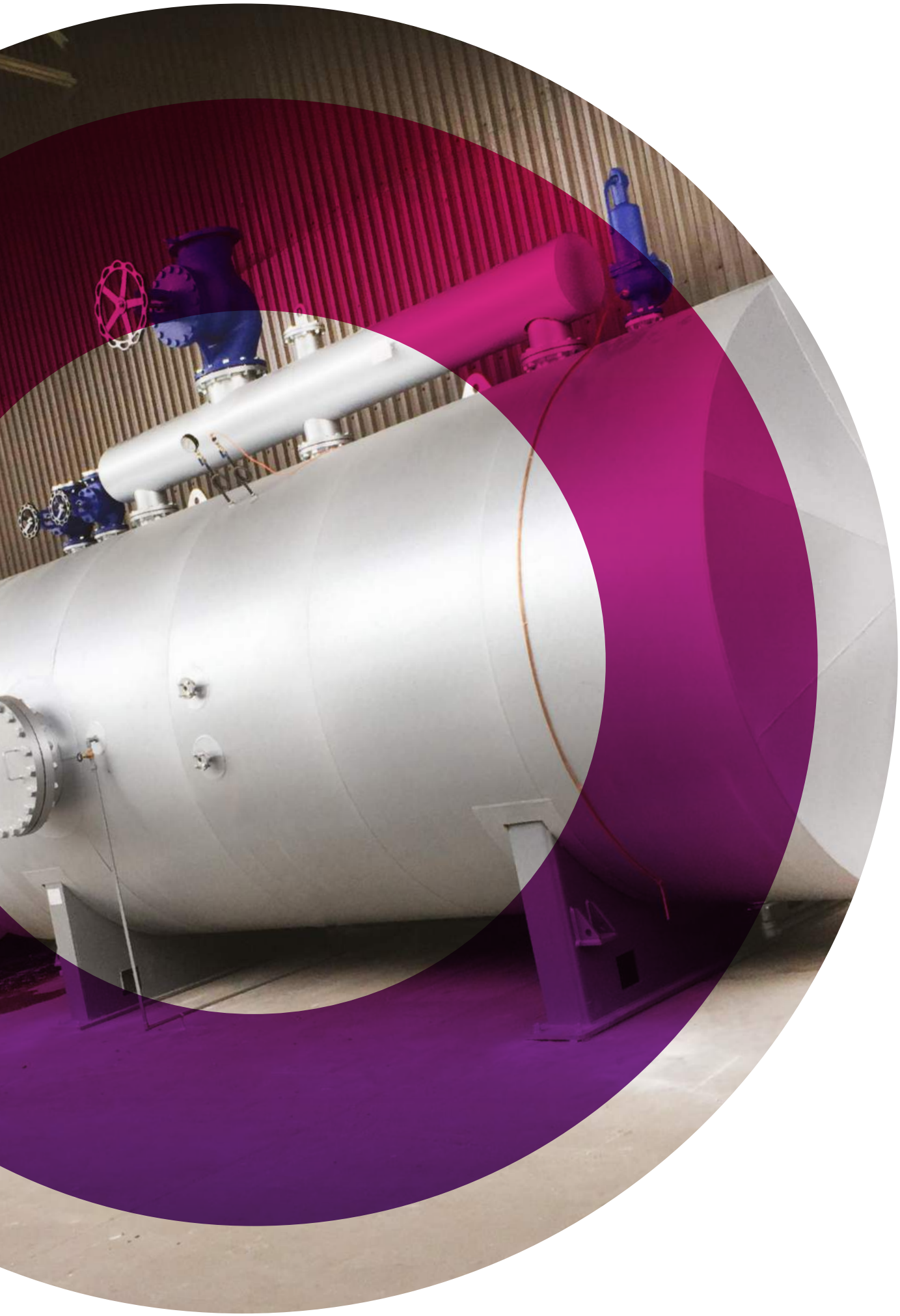

Steam Accumalators

Managing variable steam loads

While it is desirable to have combustion equipment with a high turn down in order to avoid excessive cycling and the resultant loss of efficiency, it is not advisable to operate boilers close to their minimum output for prolonged periods. Boilers are at their most efficient when operating around 70% of nameplate capacity, therefore, factories that experience highly variable steam demand would likely benefit from sizing boilers for their average load (instead of peak load) and incorporating a steam accumulator to smooth out the peaks and troughs in demand for steam.

Working Principle of Accumulators

When high-pressure, saturated water is exposed to low pressure, a percentage of this water will flash off into steam through using the remainder sensible heat in the water. The proportion of flash steam (kg of steam/kg of water) depends on the difference in pressure at which the hot water is exposed.

When plant experiences low steam demand, and the boiler can generate more steam than it needs (i.e. at maximum continuous rating of boiler), the unused, excess steam is injected into water that is stored under pressure inside the accumulator.

After some time, the temperature of stored water will increase to saturation temperature in line with the operating pressure of the boiler. When steam demand is high, in that it exceeds the maximum capacity of the boiler, it creates a drop in pressure in the accumulator which results in some of the water flashing into steam. Consequently, it can achieve the high steam demand without affecting the normal boiler operation.

Discharging of Accumulators

If the steam demand is higher than the boiler capacity, the pressure drops in the steam accumulator where the water is stored at saturation temperature. The pressure drop in the accumulator results in flash steam being generated, which offsets the high load requirement without effecting the normal boiler operation.

When the overload condition has stopped, it is subsequently followed by off-peak load, allowing excess steam to be injected into the accumulator. At this point, the accumulator will be ready to handle the next overload in demand. Consequently, the accumulator allows the boiler to achieve its preferred operating pressure and maximum efficiency.

Hotwell Tanks and Deaerators

The temperature of the water being fed to the boiler is of paramount importance.

Condensate contains approximately 25% of the energy of steam; so recovering as much condensate as possible is key to maximising operational efficiency.

Hotwell tanks and Deaerators are used to store recovered condensate whilst mix it with fresh make-up water, helping to drive off dissolved oxygen, reducing the need for chemical oxygen scavengers and improving system efficiency.

All Hotwell tanks are manufactured from stainless steel, insulated with high-density mineral wool to minimise heat losses and externally clad with self-coloured Aluzinc.

Steam injection systems are highly recommended to ensure feed water is stored at the correct temperature. Semi or full deaerator heads are available upon request.

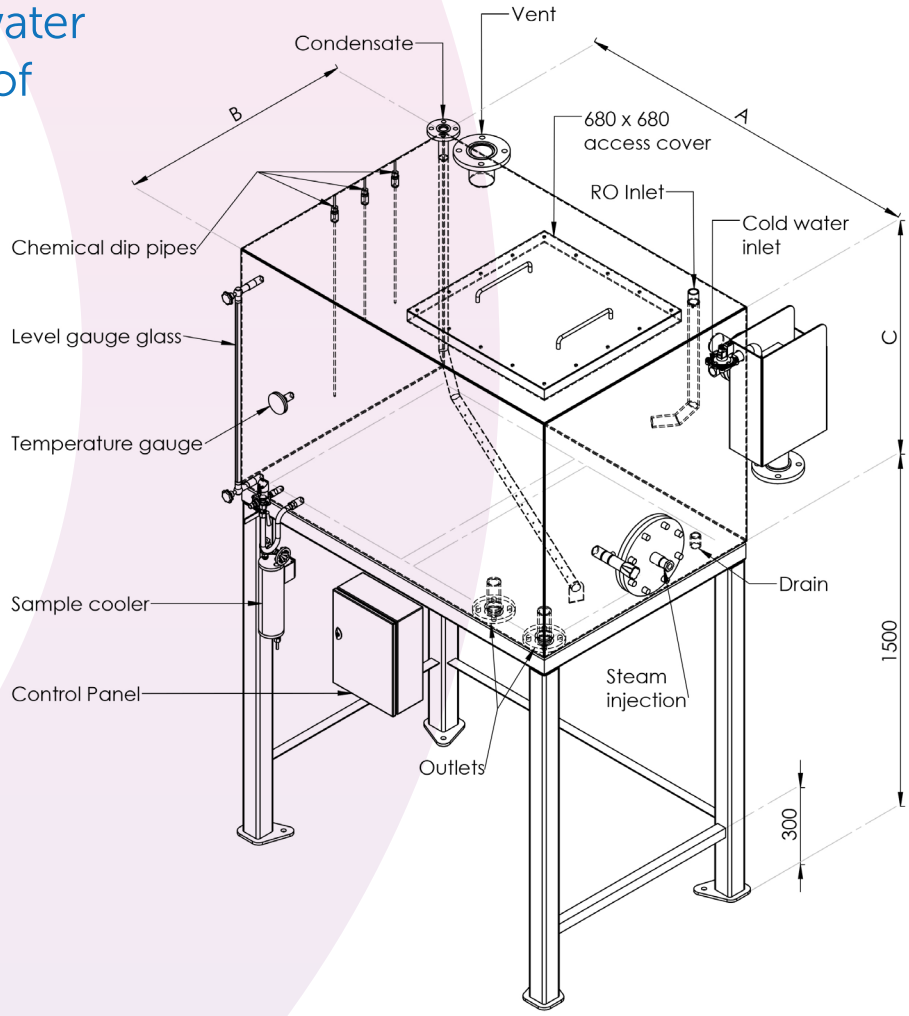

Capacity (ltrs)	0.56m³	0.75m³	1m³	1.5m³	2m³	2.5m³	3m³	3.75m³	4.5m³	6.75m³	7.5m³	8m³	9m³	12m³
A	1m	1m	1m	1.5m	2m	2.5m	2m	2.5m	3m	3m	3m	4m	4m	4m
B	0.75m	0.75m	1m	1m	1m	1m	1m	1m	1m	1.5m	2.5m	2m	1.5m	2m
C	0.75m	1m	1m	1m	1m	1m	1.5m	1.5m	1.5m	1.5m	1m	1m	1.5m	1.5m
Outlets	DN32	DN32	DN32	DN40	DN40	DN40	DN50	DN50	DN50	DN50	DN65	DN65	DN65	DN80
Overflow	DN65	DN65	DN65	DN65	DN65	DN65	DN65	DN100	DN100	DN100	DN100	DN100	DN100	DN100
Vent	DN50	DN50	DN50	DN80	DN80	DN80	DN100	DN100	DN100	DN100	DN100	DN100	DN100	DN100
Drain	1"	1"	1"	1"	1"	1"	1½"	1½"	1½"	1½"	1½"	2"	2"	2"
Inlets	1"	1"	1"	1"	1"	1"	1"	1½"	1½"	1½"	1½"	1½"	2"	2"
Condensate*	DN20	DN20	DN20	DN25	DN25	DN32	DN32	DN32	DN40	DN40	DN50	DN50	DN50	DN50

**Condensate subject to change (data based on 80% return).*

For illustration purposes only. Design drawing available upon request

MADE IN BRITAIN

Blowdown Receivers

All steam boilers must be regularly blown down to reduce the concentration of suspended and dissolved solids in the boiler water.

As this waste is under pressure and at extreme temperature there must be a safe means of storage and cooling (to below 43 degrees C) before discharging to general drainage.

Byworth manufacture a range of blowdown vessels to suit a wide range of boilers.

Our tanks are deigned and built to PD5500 and meet the requirements of the Combustion Engineering Association's guidance document BG03.

Optional extras include vent heads, cooling water injection systems and multi-boiler manifolds.

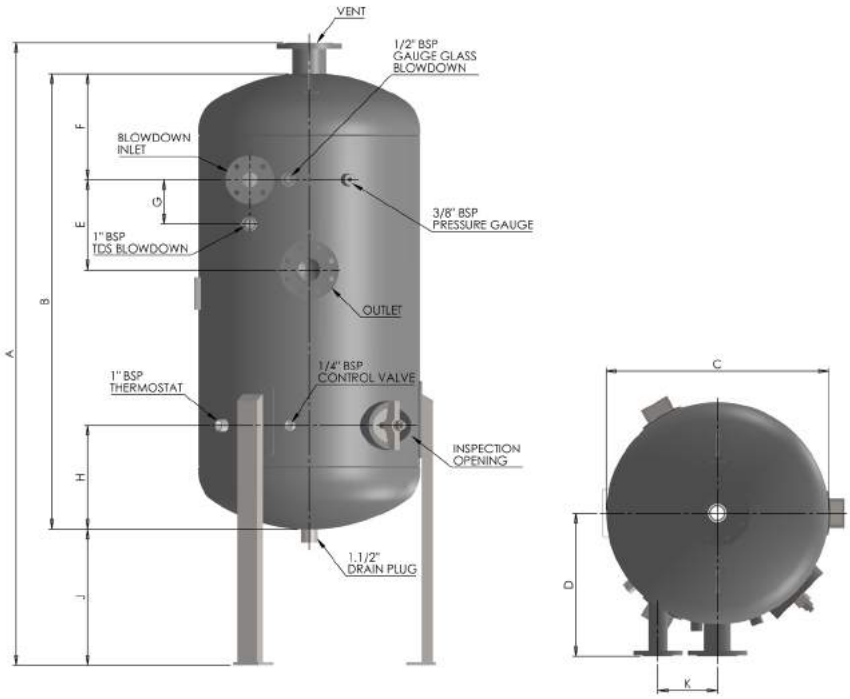

Model No.	A	B	C	D	E	F	G	H	J	K	Vent Size	Blowdown Inlet Size	Outlet Size	Inspection Opening Size	Approx. Weight (kg)
BT0	1365	808	393	290	160	201	120	218	458	120	DN80 3"	DN40 1.1/2"	DN50 2"	2" BSP Sight Hole	109
BT1	1760	1200	610	406	188	288	150	305	455	200	DN100 4"	DN50 2"	DN80 3"	180 x 120mm	210
BT2	2103	1538	749	483	305	358	150	350	460	200	DN100 4"	DN50 2"	DN80 3"	180 x 120mm	273
BT3	2312	1756	895	560	305	455	0	475	454	200	DN150 6"	DN50 2"	DN100 4"	320 x 220mm	402
BT4	2535	1981	1054	635	355	418	0	438	452	200	DN200 8"	DN50 2"	DN150 6"	320 x 220mm	635
BT5	2700	2143	1369	770	400	494	0	514	450	300	DN200 8"	DN50 2"	DN150 6"	320 x 220mm	850

All flange connections to BS EN1092:2003 PN16

For illustration purposes only. Design drawing available upon request

MADE IN BRITAIN

For further details contact our Spares Department on
+44 (0)1535 665225 / spares@byworth.co.uk

Byworth
BOILERS

OEM
Partner

Endress+Hauser
People for Process Automation